Dynamik Door Hinge - Black - Round Corners (Model: G.DK.SG.BK.008)

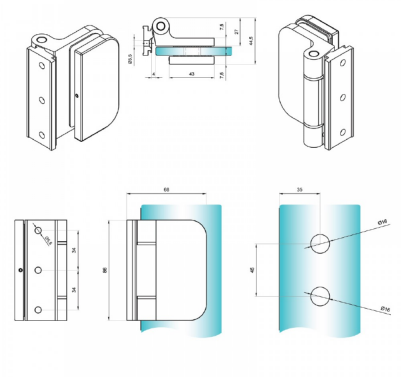

• The Round integrated door hinges work with the H-type, Z- type and L-type aluminium door frames and are suitable for glass thicknesses of 8-10mm.
• The recommended max door height is 2400mm.
• Above a height of 2200 mm, it is recommended to use 3 hinges.
• The maximum recommended weight of glass doors using these hinges:
2 hinges = 80kg
3 hinges = 100kg

Attributes:

Product Code:	G.DK.SG.BK.008
Unit Of Sale:	Each