Z Type Door Frame - Anodised (Model: G.DK.SG.SA.005)

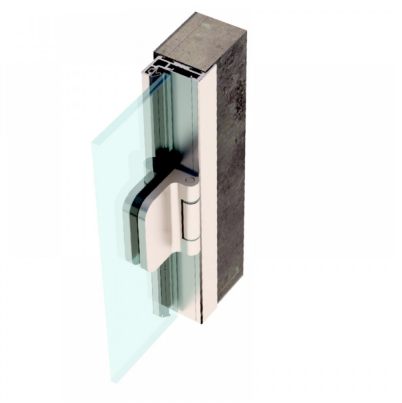

• The Z-type aluminium door frame with integrated hinge & receiver profile is suitable for glass thicknesses of 8-10mm. The recommended max door height is 2400mm. Above a height of 2200 mm, it is recommended to use 3 hinges.
• This profile is designed in a z type shape to cover the edge of the reveal and create a rebate for the glass door reducing noise and air movement.
• Installing of the hinges requires no drilling or milling and they can be adjusted in seconds which makes this system a favourite for the installer.

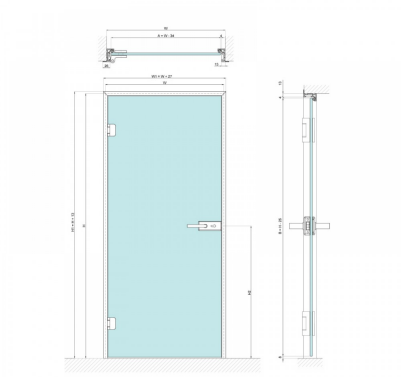

Attributes:
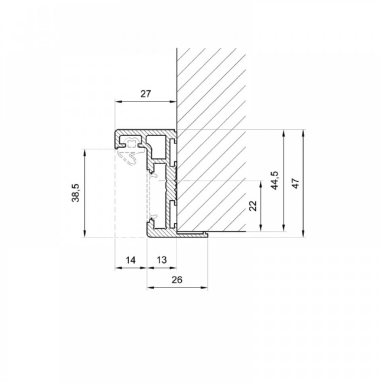
Product Code: G.DK.SG.SA.005
Unit Of Sale: 6 Metres