Overlay Drilled Glass Door Hinges 12 Kg Pr - Polished Chrome (Model: I0077)

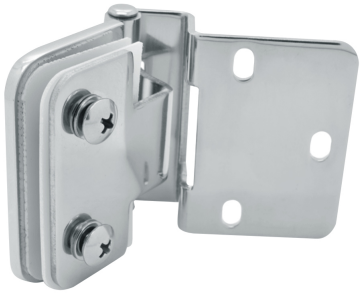

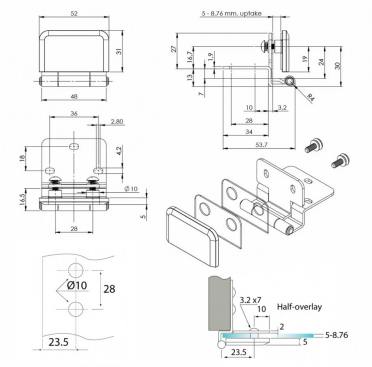

- Available in both Inset & Half - overlay formats.
- Suitable for 5-8mm glass.
- 52 x 31 x 13mm.
- Max 12kg per pair.
- Door Glass Half-overlay = 7mm.

Attributes:

Product Code: I0077

Unit Of Sale: Pair