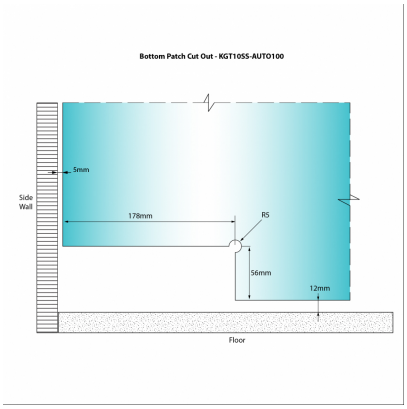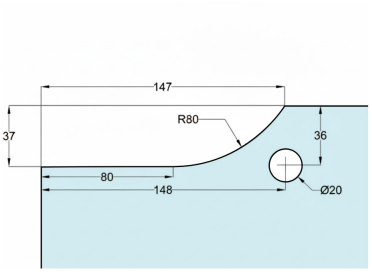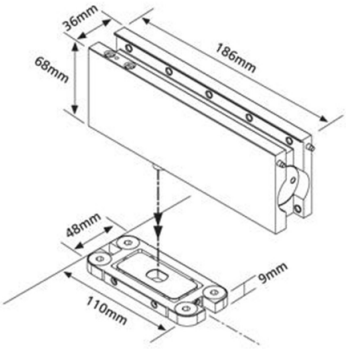Hydraulic Bottom Patch Door Kit Incl. Top Patch & Pivot - BK (Model: KDKIT001.BK)